Vinnova Palma Vanity Collection 701284G-SO-GW

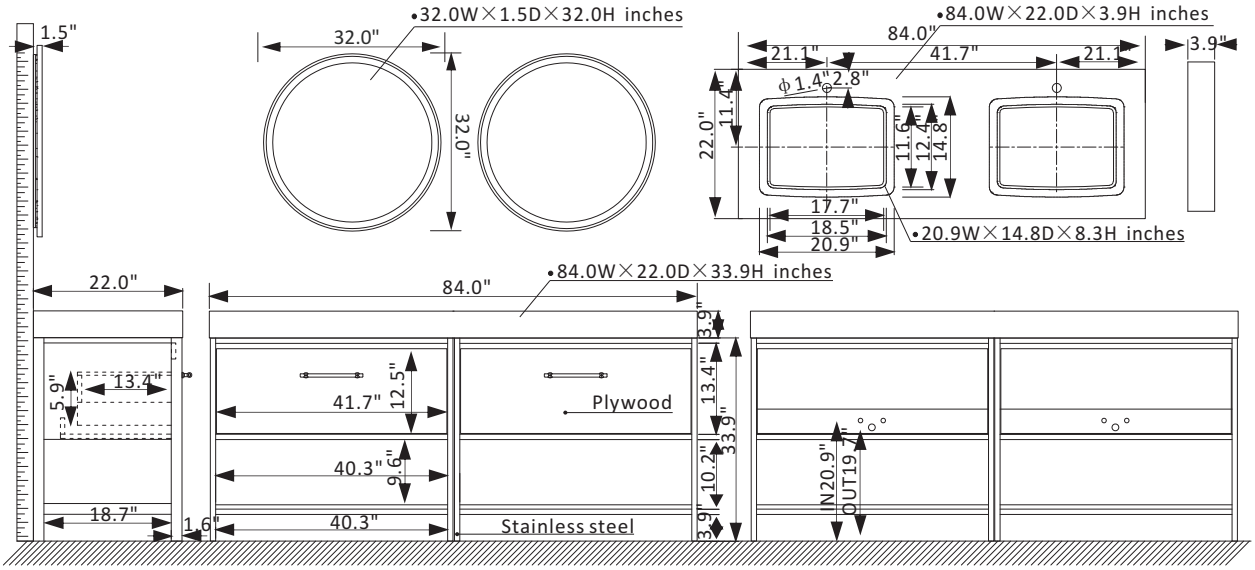

Features

Brushed Gold Stainless Steel Frame with plywood construction ensure supreme sturdiness.
Available in beautiful Suleiman Oak finish to complement any décor.
2 soft-close drawers provide concealed storage for toiletries.
White composite grain white stone countertop with beautiful natural veining.
Rectangular, ceramic undermount basin coordinates with top.
Brushed Gold finish hardware for a touch of style and contrast.
Open fixed shelf provides ample room for item storage and display.
Double, circular LED-framed mirrors match vanity.
Pre-drilled and designed for easy plumbing and faucet installation.

* *Does not include faucet, drain assembly, P-trap, or backsplash.*

VINNOVA
FASHION BATHROOM LIFE